381 PCS

M38 - B0808

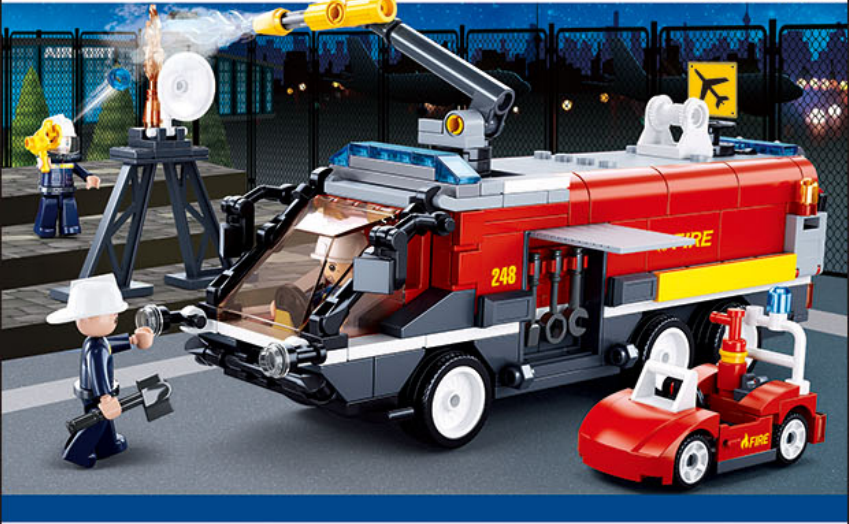
AIRPORT
248
FIRE
FIRE

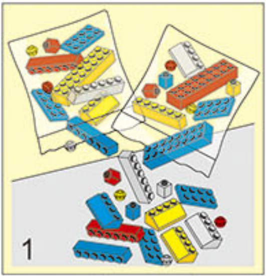

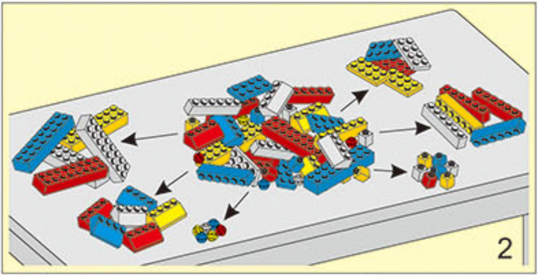

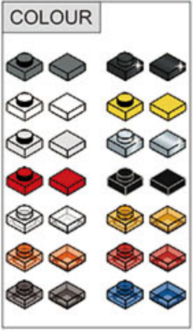

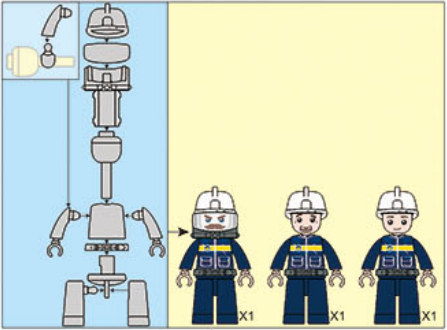

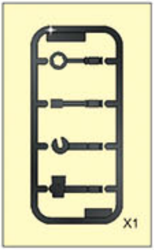

1

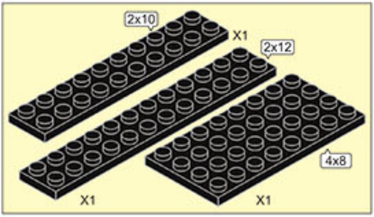
2x10
X1
2x12
4x8
X1
X1

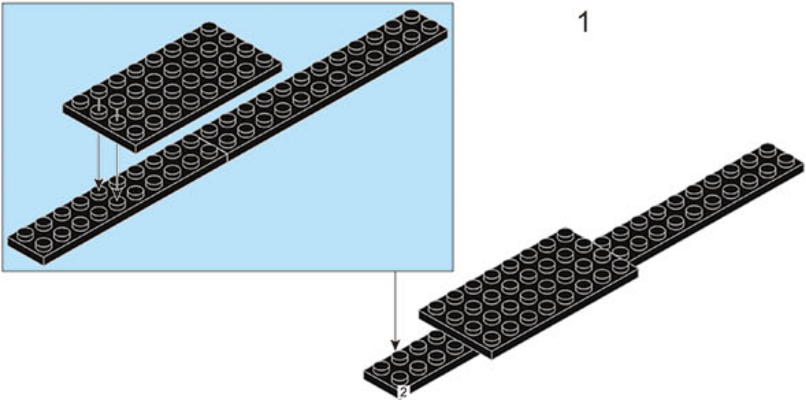

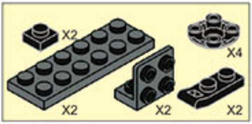
X2
X4
X2
X2
X2

2

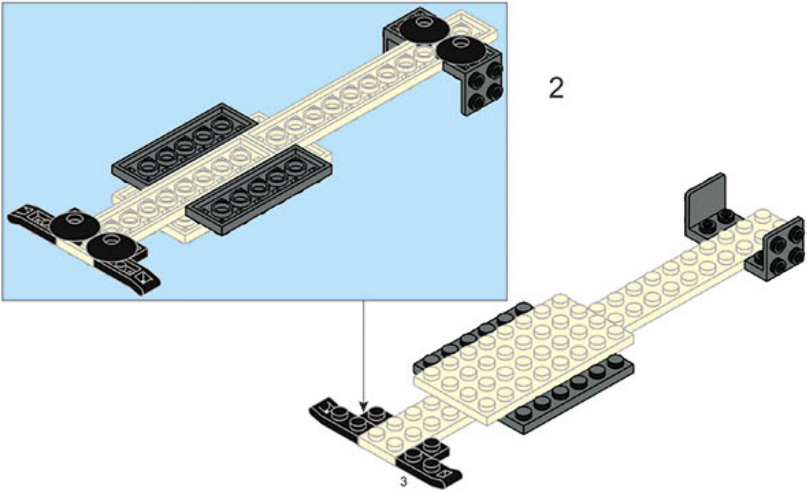

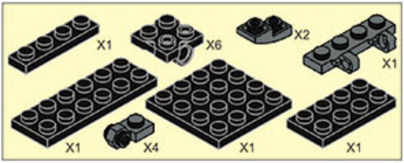
X1
X6
X2
X1
X1
X4
X1
X1

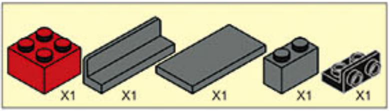
X1
X1
X1
X1
X1

3

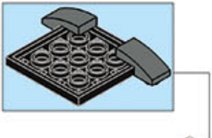

4

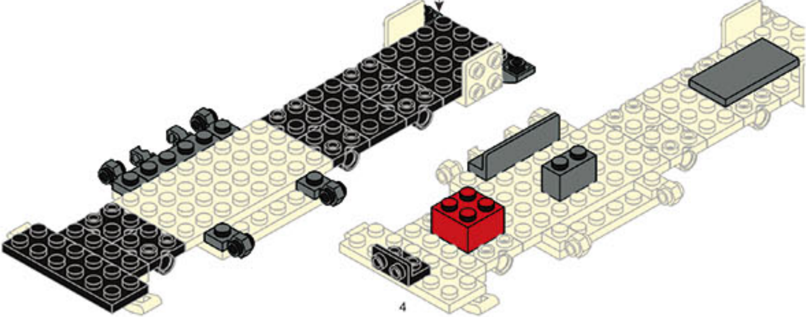

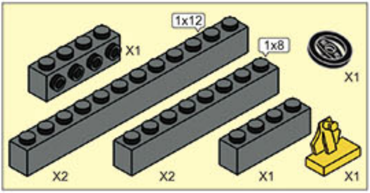
X1
1x12
1x8
X1
X2
X2
X1
X1

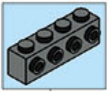

5

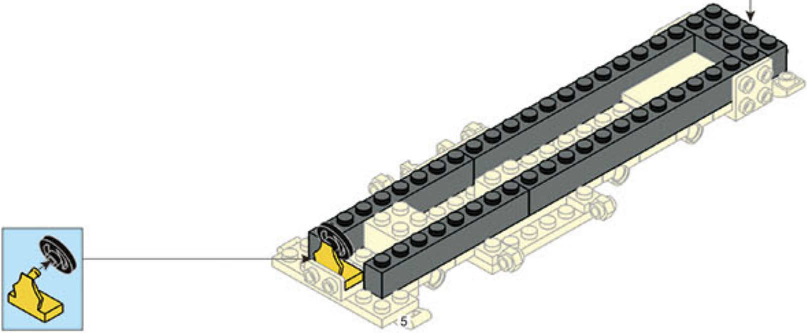

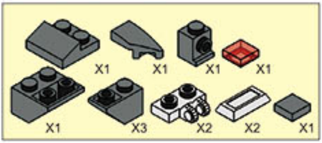
X1
X1
X1
X1
X1
X3
X2
X2
X1

6

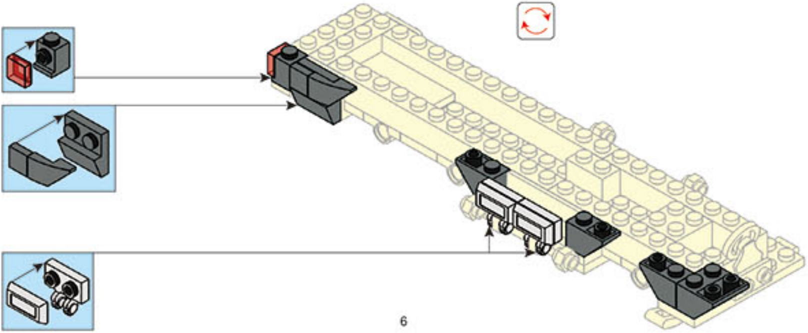

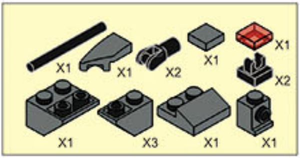
X1
X1
X2
X1
X1
X2
X1
X3
X1
X1

7

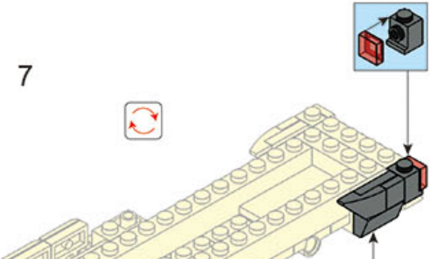

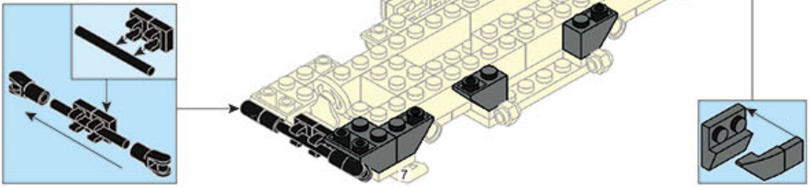

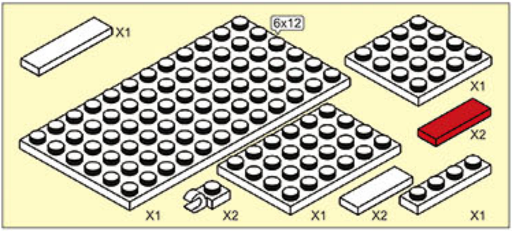
X1
6x12
X1
X2
X1
X2
X1
X2
X1

8

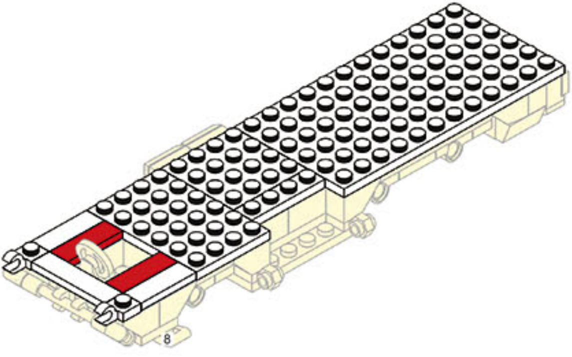

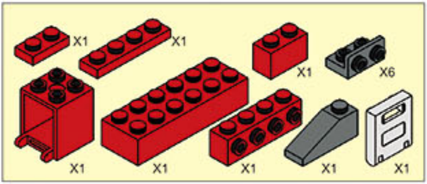
X1
X1
X1
X6
X1
X1
X1
X1
X1

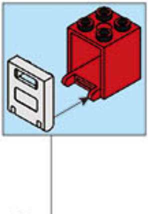

9

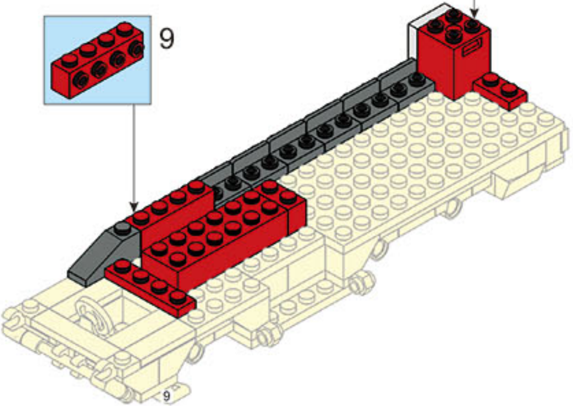

10

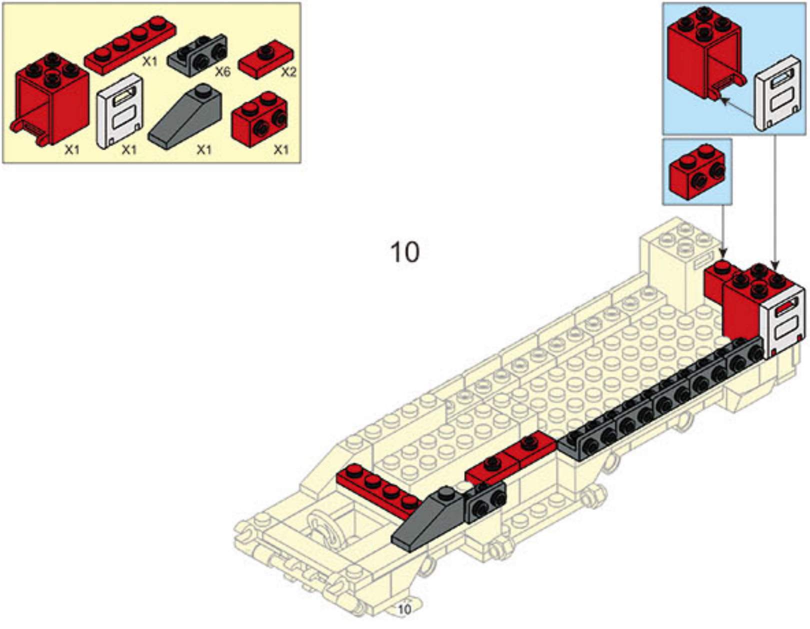
X1
X6
X2
X1
X1
X1
X1
10

11

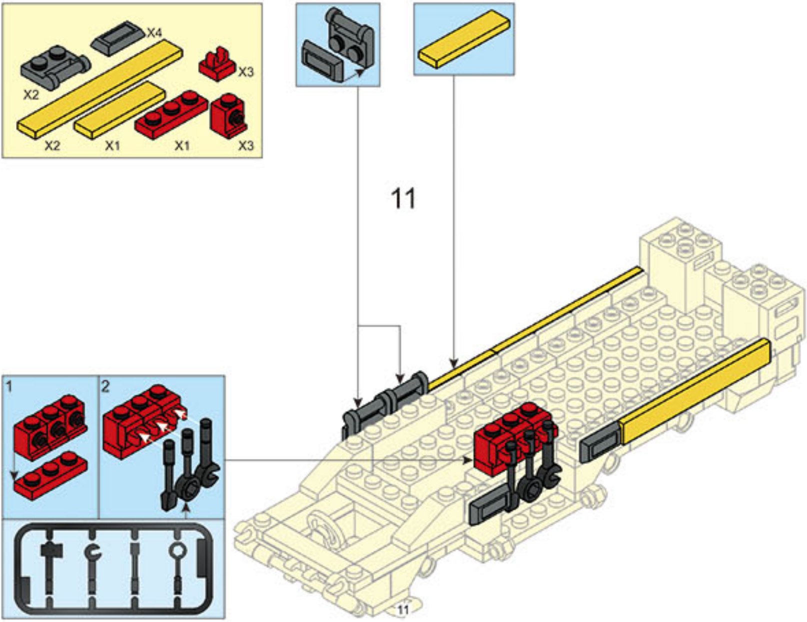
X4
X3
X2
X2
X1
X1
X3
1
2
11

12

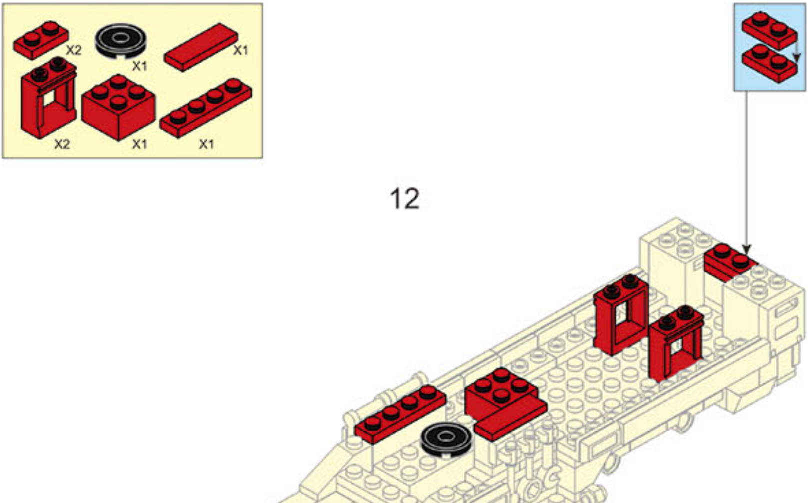
X2
X1
X1
X2
X1
X1

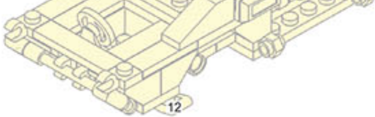

13

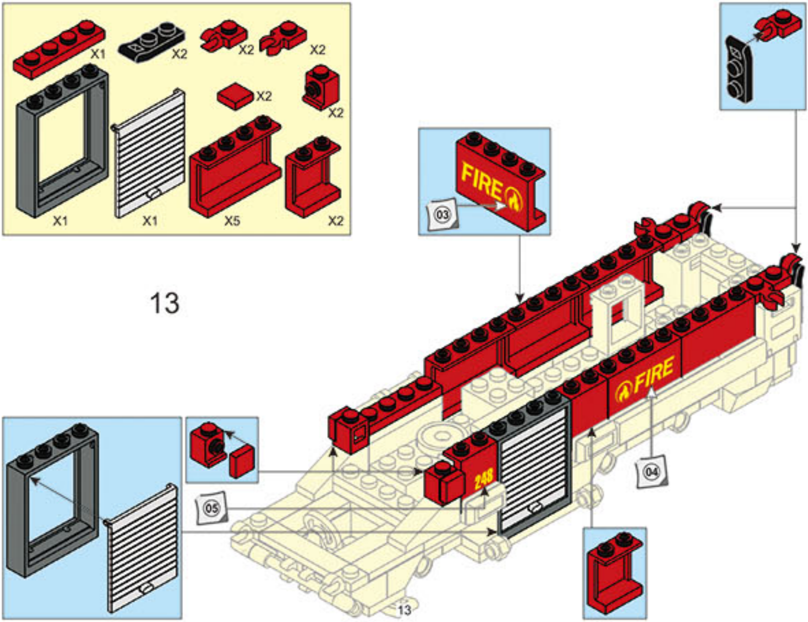
X1
X2
X2
X2
X2
X2
X1
X1
X5
X2
FIRE
03
FIRE
248
04
05
13

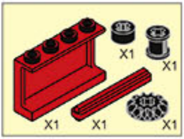
X1
X1
X1
X1
X1

14

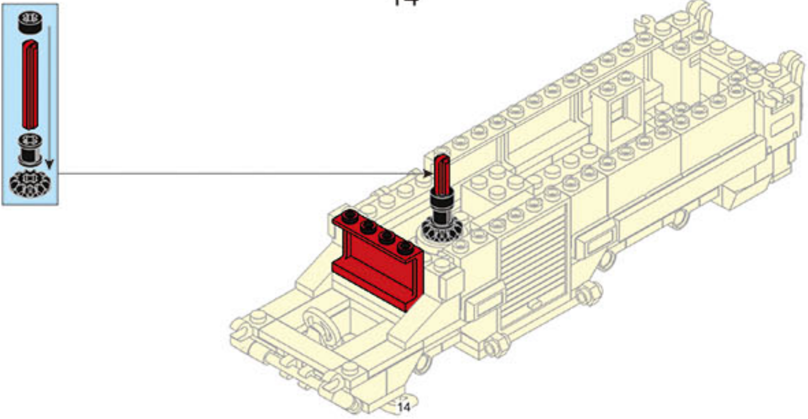

15

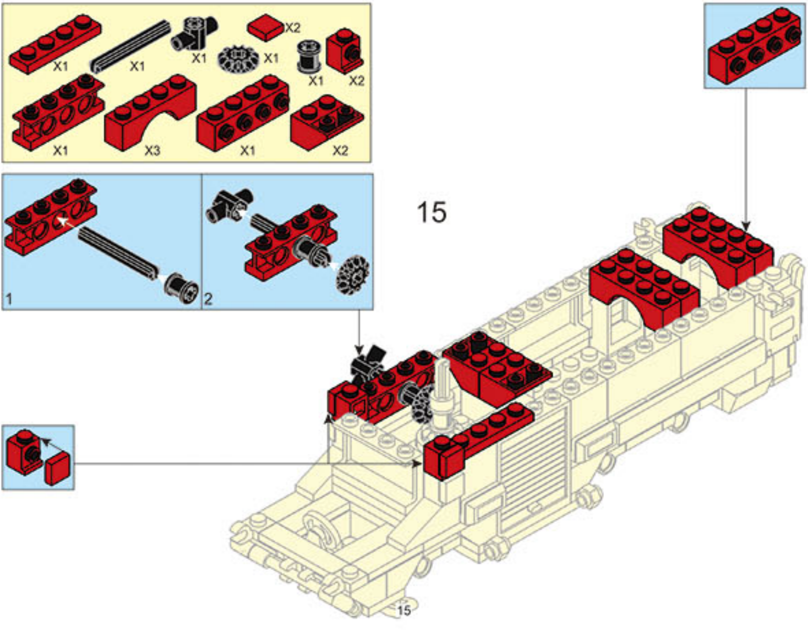
X1
X1
X1
X2
X1
X1
X2
X1
X3
X1
X2
1
2
15

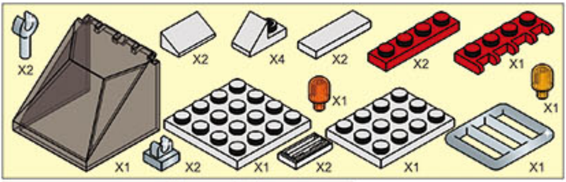
X2
X1
X2
X4
X2
X2
X1
X1
X2
X1
X2
X1
X1
X1

16

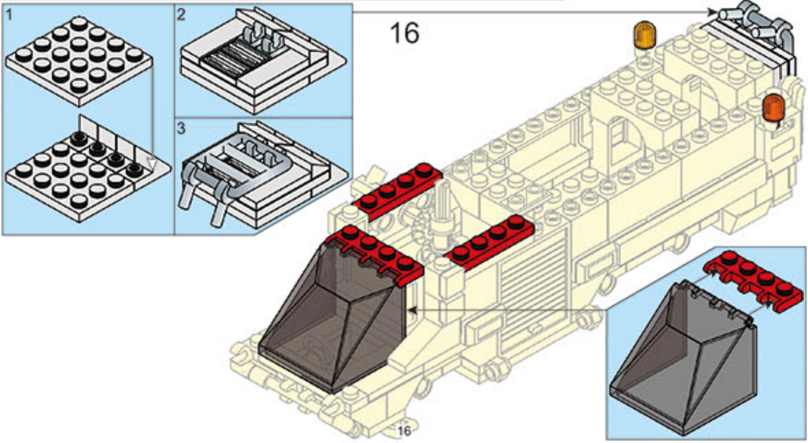

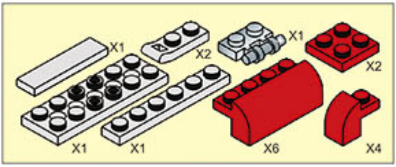
X1
X2
X1
X2
X2
X1
X1
X6
X4

17

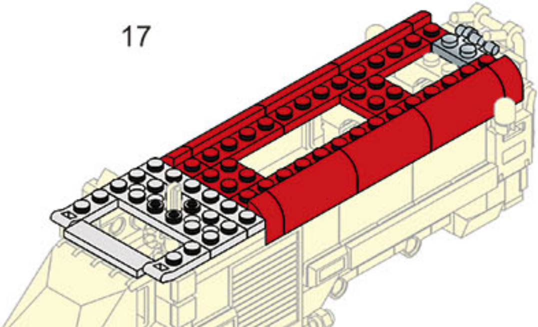

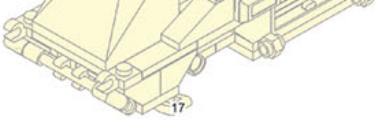

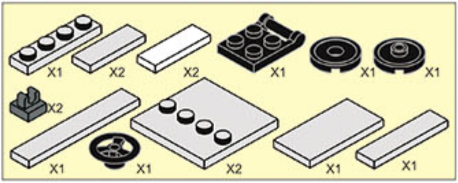
X1
X2
X2
X1
X1
X1
X2
X1
X1
X2
X1
X1

18

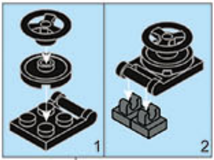

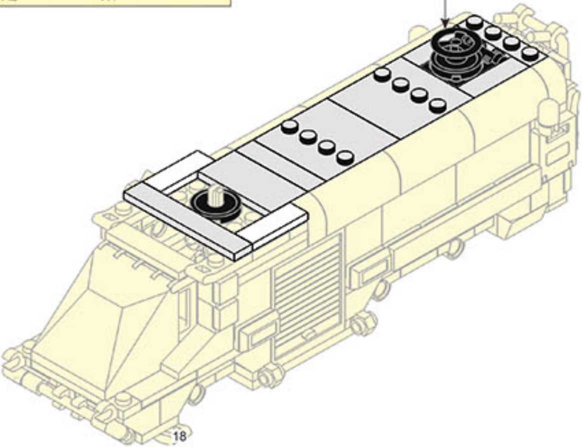

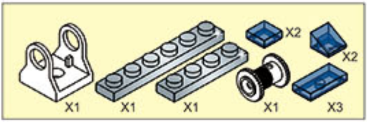
X2
X2
X1
X1
X1
X1
X3

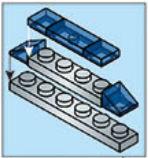

19

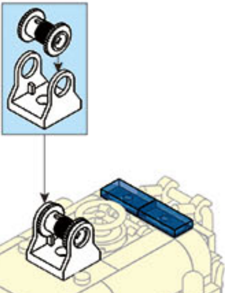

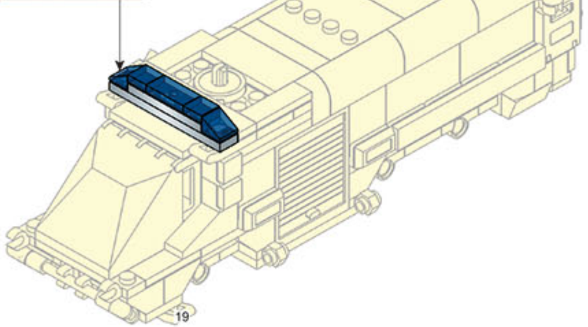

20

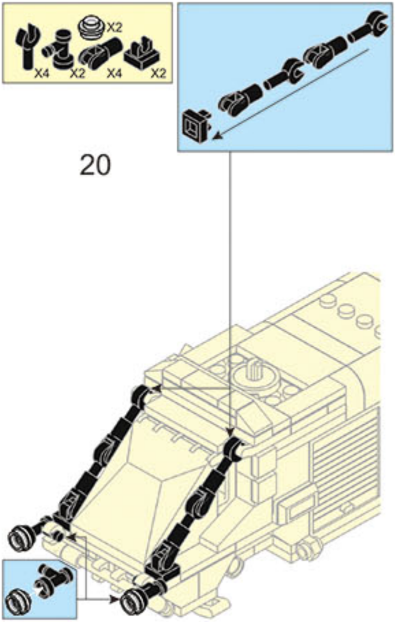

X4
X2
X2
X4
X2

21

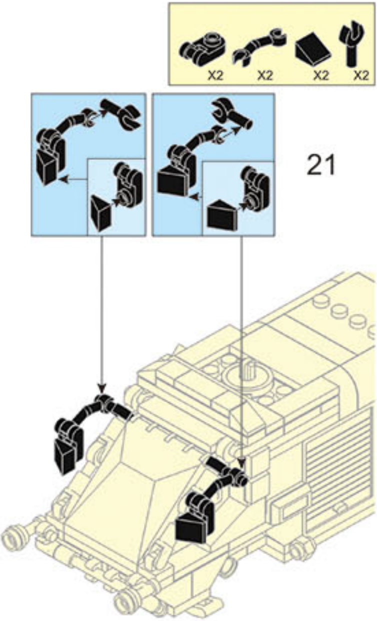

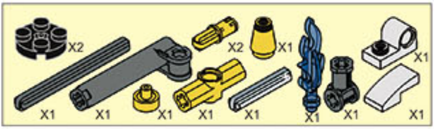
X2
X2
X1
X1
X1
X1
X1
X1
X1
X1
X1
X1
X1

22

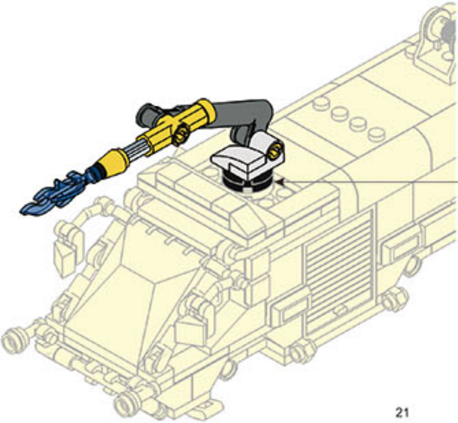

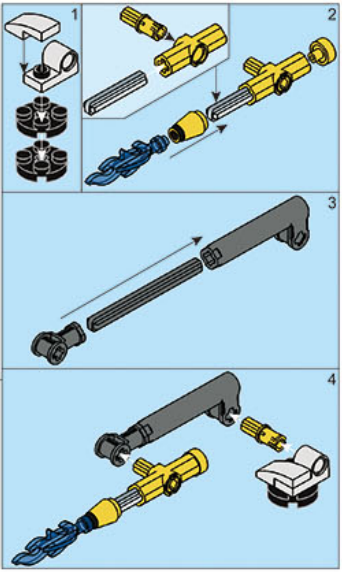

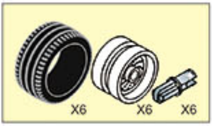

23

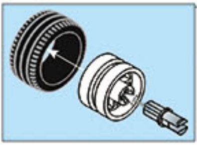

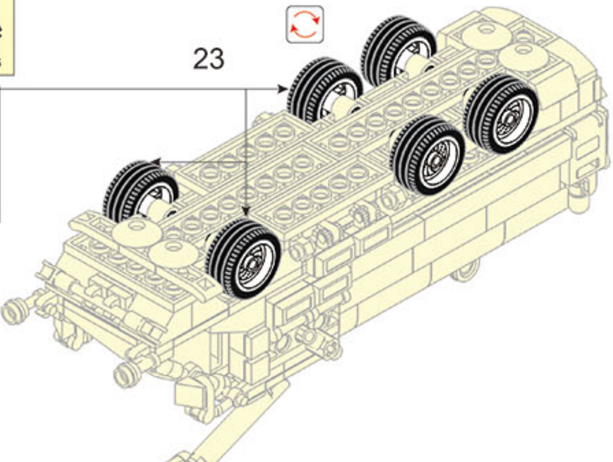

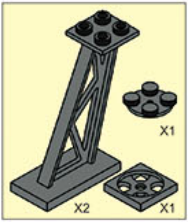

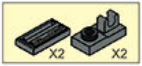

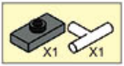

24

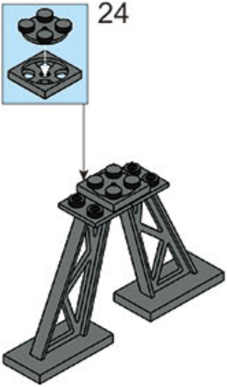

25

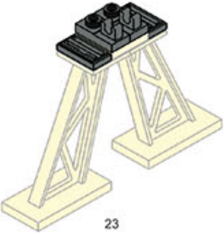

26

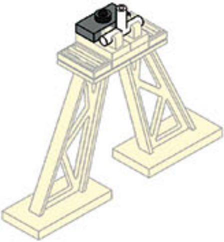

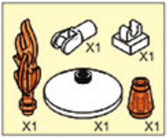
X1
X1
X1
X1
X1

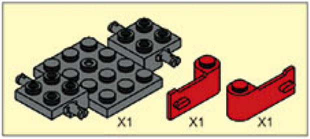

27

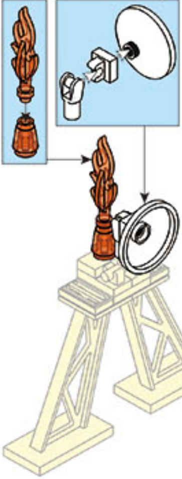

28

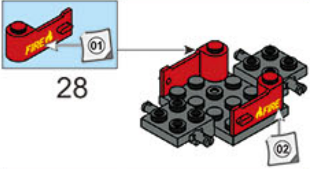
FIRE
01
FIRE
02

29

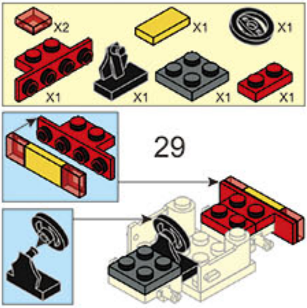
X2
X1
X1
X1
X1
X1
X1

30

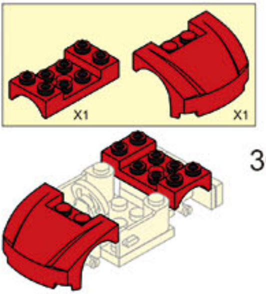

31

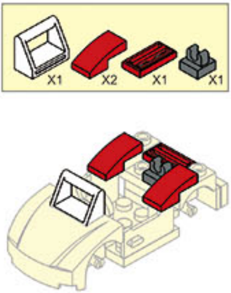

32

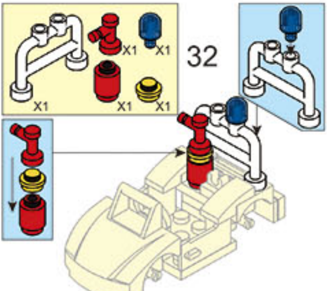
X1
X1
X1
X1
X1

33

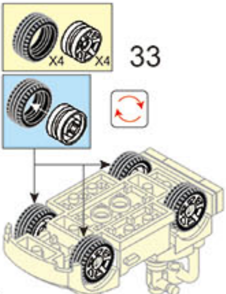

34

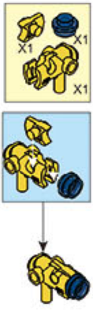

35

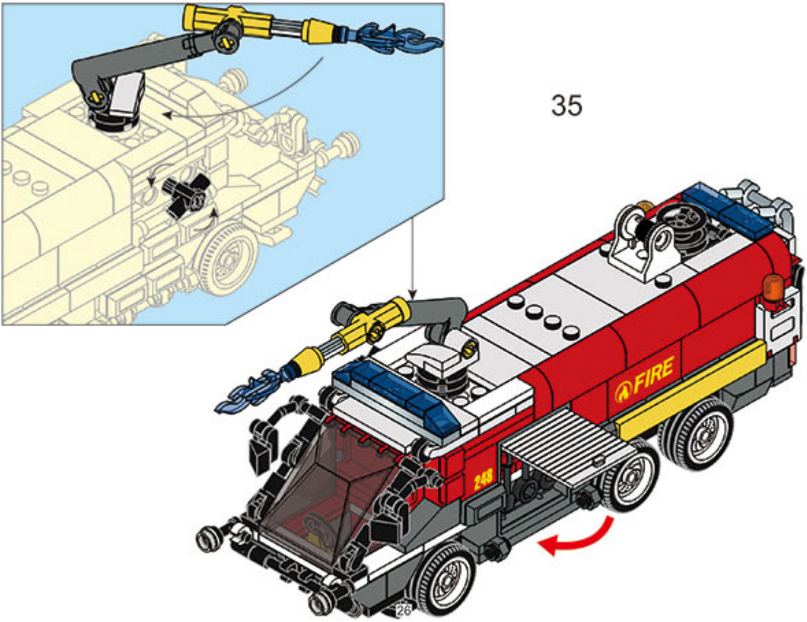

⚠ WARNING:

CHOKING HAZARD - Small parts.
Not for children under 3 years.